Centre Number	Candidate Number	Name

CAMBRIDGE INTERNATIONAL EXAMINATIONS
General Certificate of Education Advanced Level

PHYSICS **9702/05**

Paper 5 Practical Test

October/November 2003

1 hour 30 minutes

Candidates answer on the Question Paper.
Additional Materials: As specified in the Confidential Instructions.

READ THESE INSTRUCTIONS FIRST

Write your Centre number, candidate number and name on all the work you hand in.
Write in dark blue or black pen in the spaces provided on the Question Paper.
You may use a soft pencil for any diagrams, graphs or rough working.
Do not use staples, paper clips, highlighters, glue or correction fluid.

Answer **both** questions.
You are expected to record all your observations as soon as they are made, and to plan the presentation of the records so that it is not necessary to make a fair copy of them. The working of the answers is to be handed in.
Marks are mainly given for a clear record of the observations actually made, for their suitability and accuracy, and for the use made of them.
Additional answer paper and graph paper should be submitted only if it becomes necessary to do so.
You are reminded of the need for good English and clear presentation in your answers.
At the end of the examination, fasten all your work securely together.

If you have been given a label, look at the details. If any details are incorrect or missing, please fill in your correct details in the space given at the top of this page.

Stick your personal label here, if provided.

For Examiner's Use	
1	
2	
Total	

This document consists of **9** printed pages and **3** blank pages.

© UCLES 2003
UNIVERSITY of CAMBRIDGE
Local Examinations Syndicate
[Turn over

BLANK PAGE

DO NOT WRITE IN THIS SPACE

It is recommended that you spend about 60 minutes on this question

1 Many electrical components have to function properly in conditions of extreme temperature and moisture content. In this experiment you will maintain a semiconductor diode at zero degrees Celsius and investigate how the current in it varies as the potential difference across it is changed.

(a) Set up the circuit shown in Fig. 1.1. The 10 Ω resistor is to prevent current overload in the diode.

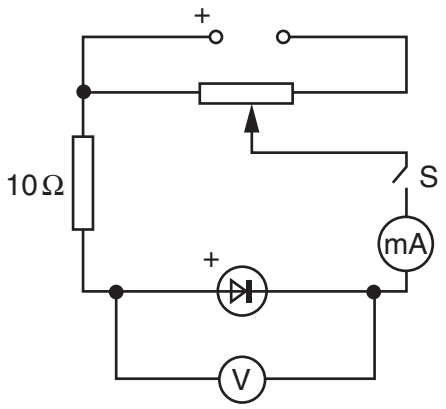

Fig. 1.1

(b) **(i)** Add a quantity of ice to the water in the beaker (your Supervisor will supply ice on request).

(ii) Stir the ice/water mixture gently using the thermometer until the temperature is at, or close to, 0 °C.

(iii) Record and maintain this temperature for the rest of the experiment. (You may need to ask your Supervisor for more ice).

temperature of ice/water mixture = ...

(iv) Place the diode in the ice/water mixture.

(c) **(i)** Close switch S.

(ii) Measure and record the potential difference V across the diode and the current I.

V = ...

I = ...

(iii) Open switch S.

(d) Change the potential difference and repeat **(c)** until you have five more sets of readings for V and I. Include all six values of ln(I/A) in your table of results.

(e) **(i)** Plot a graph of ln(I/A) (y-axis) against V (x-axis) and draw the best straight line through your points.

(ii) Determine the gradient and y-intercept of the line of best fit.

gradient = ...

y-intercept = ...

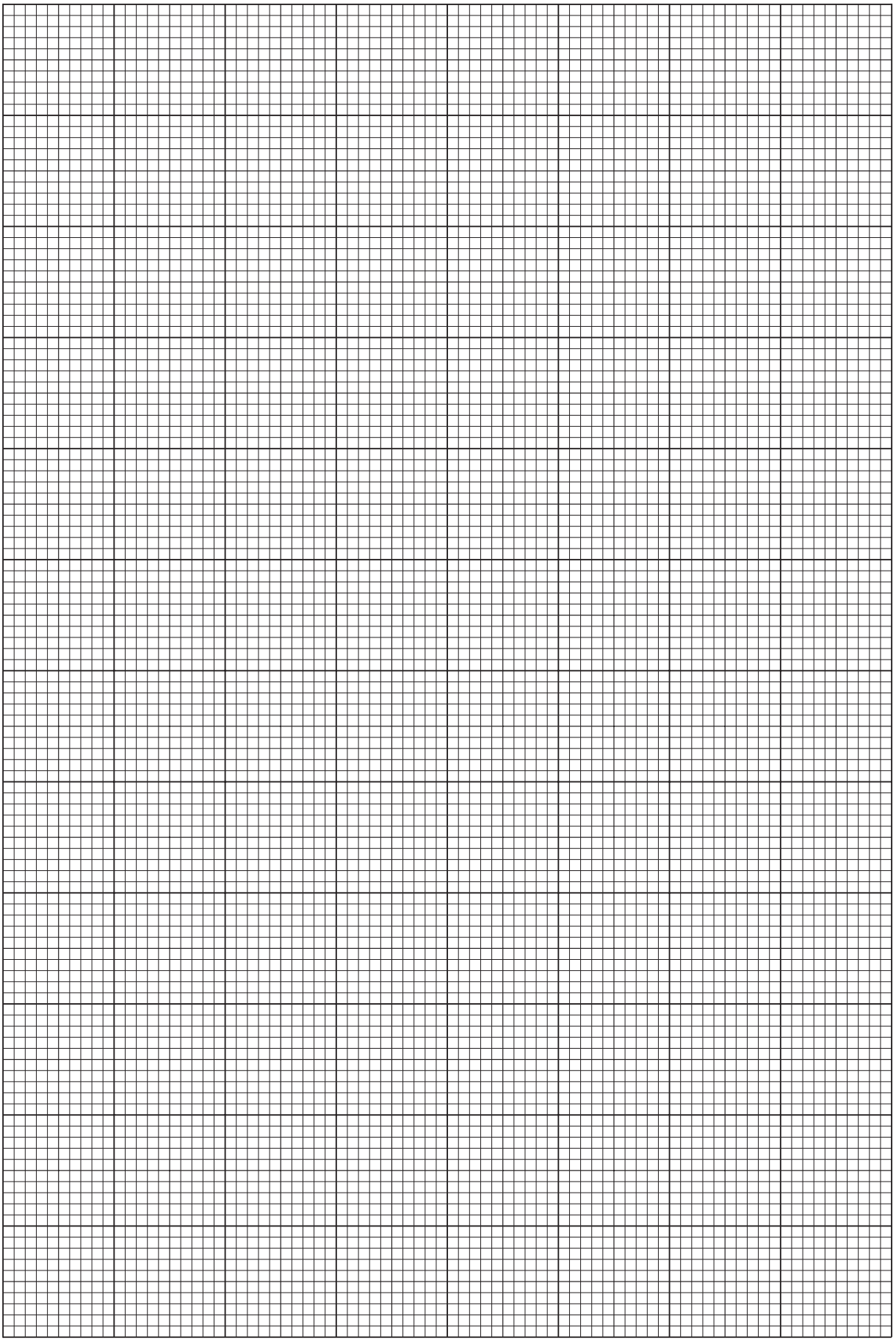

(f) A simplified expression relating the current I in the diode to the potential difference V is

$$I = I_o \, e^{\{eV/kT\}}$$

where k is the Boltzmann constant (= 1.38×10^{-23} J K^{-1}), e is the elementary charge, T is the temperature in kelvin, and I_o is a constant.

Using your answers from **(e) (ii)**, and the value for the temperature (in kelvin) of the ice/water mixture, determine values for e and I_o.

e = ...

I_o = ...

(g) Calculate the current in the diode if it were placed in boiling water with a potential difference of 1.0 V applied across it.

I = ...

It is recommended that you spend about 30 minutes on this question.

2 Modern day lifts in tall buildings are of a relatively simple design. A passenger car is connected to a counterweight by a steel cable which passes over a system of pulleys at the top of the lift shaft, as shown in Fig. 2.1.

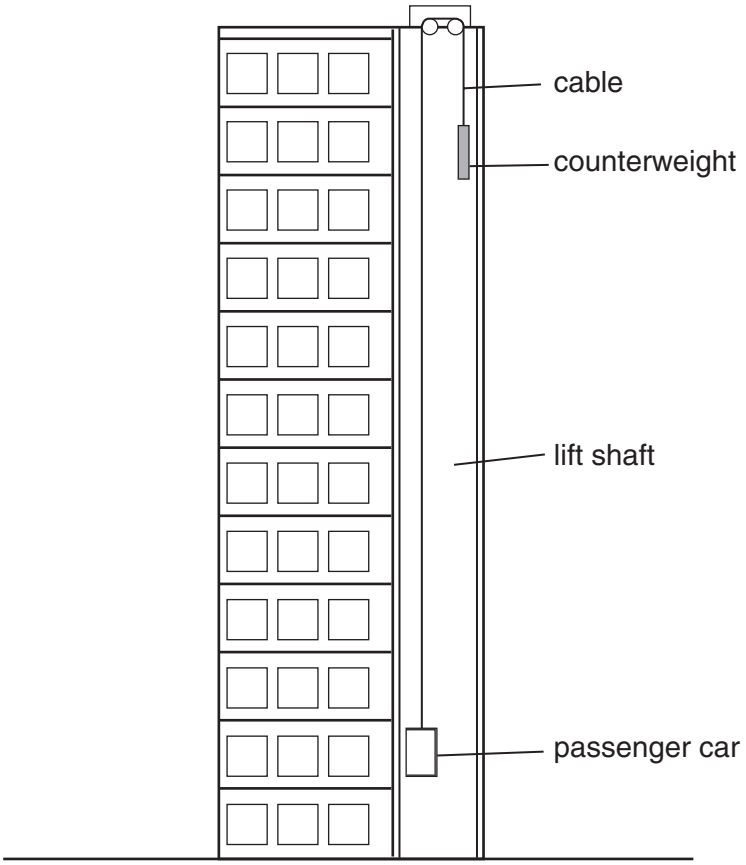

Fig. 2.1

The passenger car and the counterweight are of similar mass. A motor, which is connected to the pulley system, is used to raise and lower the passenger car. A braking system enables the passenger car to come to rest at any desired position. If the motor and the braking system were to fail, the passenger car and counterweight would move under the action of gravity until one of several safety features incorporated in the design of the system (not shown on Fig. 2.1) brings the passenger car and counterweight to rest.

A failure of the motor and braking system may be simulated in the laboratory by connecting two objects A and B of mass m_A and m_B respectively by a thin steel wire which passes over a pulley, as shown in Fig. 2.2.

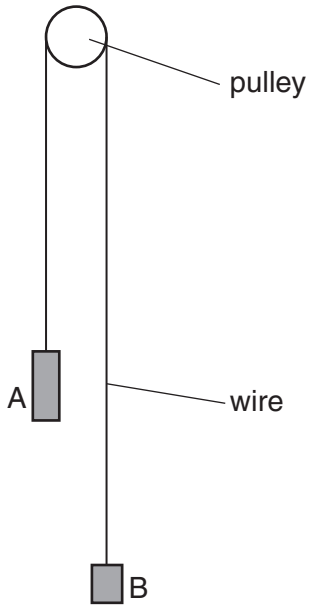

Fig. 2.2

Design a laboratory experiment to investigate how the acceleration of object A depends on the mass m_B of object B when the system is allowed to move freely under the action of gravity. You may assume that m_A is constant throughout and that $m_A > m_B$. You should draw a diagram showing the arrangement of your equipment. In your account you should pay particular attention to

(a) the procedure to be followed,

(b) the measurements that would be taken,

(c) how the acceleration of object A would be determined,

(d) any safety precautions that you would take.

.....

.....

.....

.....

.....

.....

.....

.....

.....

.....

.....

.....

.....

.....

BLANK PAGE

BLANK PAGE